REVISIONS			
REV	DESCRIPTION	DATE	APPROVED
0.2	INITIAL RELEASE	WW1804	

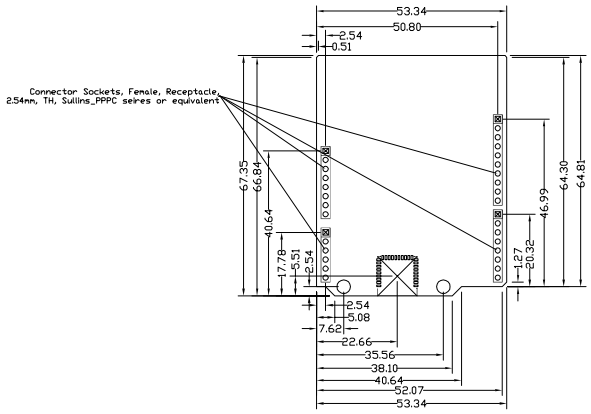

TOP VIEW

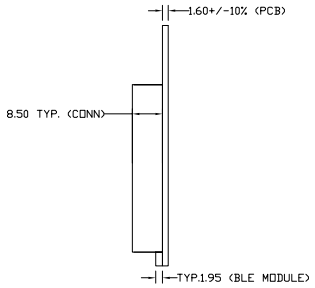

SIDE VIEW

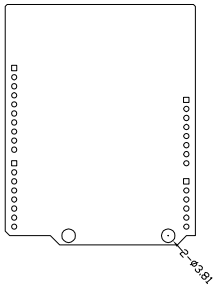

BOTTOM VIEW

UNLESS OTHERWISE SPECIFIED	SIGNATURES	DATE
DIMENSIONS ARE IN MM TOLERANCES ON: +/- 0.2 ANGLES +/- 1 DEGREE	DRAWN:	WW1804
	CHECKED	
	ENGRG	
	ISSUED	

CYPRESS SEMICONDUCTOR Corp.

CYBT-423028-EVAL

SIZE	REV NO	DWG NO
	0.1	

SCALE 1:1 | THE 3RD PROJECTION | SHEET: 1 OF 1